STRATA PLAN OF LOT A, SECTION 33, BLOCK 5 NORTH, RANGE 1 WEST, PLAN 75312, NEW WESTMINSTER DISTRICT

"MUNICIPALITY OF SURREY"

STRATA PLAN N.W. 2715

DEPOSITED AND REGISTERED IN THE LAND TITLE OFFICE AT NEW WESTMINSTER, B.C. THIS 22ND DAY OF JANUARY, 1988

REGISTRAR

AB11202 to AB11230

CIVIC ADDRESS:

"TURNBERRY PLACE"
9771 - 9785 - 152 B STREET,
SURREY, B.C.

SCALE: 1 : 500

0 5 10 20 30 m

ALL DISTANCES ARE IN METRES

PT DENOTES PART
S.L DENOTES STRATA LOT
A DENOTES AREA
LCP DENOTES LIMITED COMMON PROPERTY
(1) DENOTES BUILDING NUMBER
(C) DENOTES COMMON PROPERTY
(D) DENOTES DECK
(G) DENOTES GARAGE
(P) DENOTES PATIO

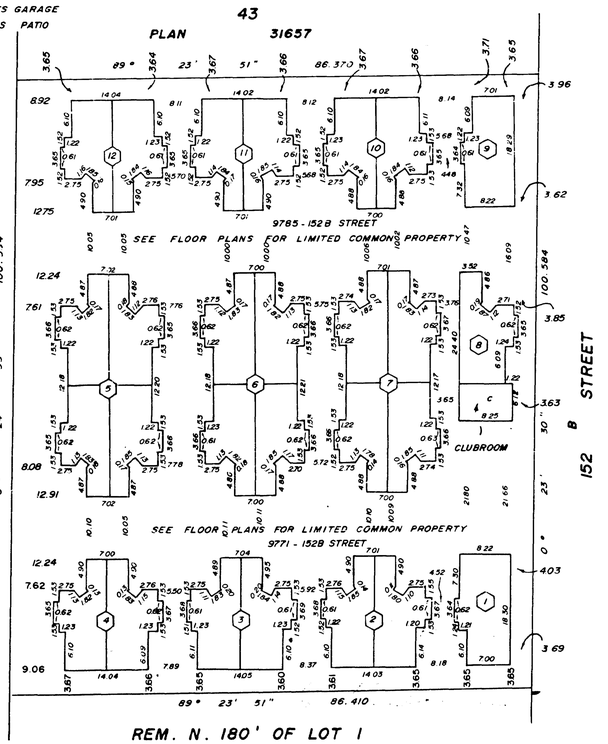

THE ADDRESS FOR THE SERVICE OF DOCUMENTS ON THE STRATA CORPORATION IS:

THE OWNERS
STRATA PLAN N.W. 2715
1820, BURRARD STREET
VANCOUVER, B.C., V6J 3H1

I, J. G. CAMERON OF SURREY, BRITISH COLUMBIA LAND SURVEYOR, HEREBY CERTIFY THAT THE BUILDINGS ERECTED ON THE PARCEL DESCRIBED ABOVE ARE WHOLLY WITHIN THE EXTERNAL BOUNDARIES OF THAT PARCEL.
THIS 8TH DAY OF December, 1987.

B.C.L.S.

CAMERON & ASSOCIATES
UNIT 8 - 15243 91st AVE.,
SURREY, B.C., V3R 8P8

THIS PLAN LIES WITHIN THE GREATER VANCOUVER REGIONAL DISTRICT

FILE: 87-A-2463

CONDOMINIUM ACT 14-326

STRATA PLAN N.W. 2715

BLDG. NO.	STRATA LOT NO.	UNIT NO.	SHEET NO.	AREA (m2) INCLUDING GARAGE	FORM 1 SCHEDULE OF UNIT ENTITLEMENT: UNIT ENTITLEMENT	FORM 2 SCHEDULE OF INTEREST UPON DESTRUCTION: INTEREST UPON DESTRUCTION
1	1	1	3	114.5	2293	2985
	2	2	3	122.6	2484	2954
2	3	3	4	164.1	3558	3686
	4	4	4	164.1	3558	3655
3	5	5	5	164.1	3558	3655
	6	6	5	164.1	3558	3652
4	7	7	6	162.7	3523	3581
	8	8	6	162.7	3523	3768
5	9	9	7	169.1	3681	3386
	10	10	7	169.1	3681	3581
	11	6	7	169.1	3681	3471
	12	7	7	169.1	3681	3340
6	13	11	8	169.1	3681	3612
	14	12	8	169.1	3681	3612
	15	4	8	169.1	3682	3564
	16	5	8	169.1	3682	3564
7	17	13	9	169.1	3682	3643
	18	14	9	169.1	3682	3643
	19	2	9	169.1	3682	3564
	20	3	9	169.1	3682	3565
8	21	1	10	167.7	3647	3757
12	22	8	14	164.1	3558	3325
	23	9	14	164.1	3558	3355
11	24	10	12	164.1	3558	3355
	25	11	12	164.1	3558	3355
10	26	12	13	164.1	3558	3371
	27	13	13	164.1	3558	3371
9	28	14	11	114.5	2288	2830
	29	15	11	122.7	2484	2800
AGGREGATE				4637.6	100000	100000

STATUTORY DECLARATION

1, THE UNDERSIGNED DO SOLEMNLY DECLARE THAT

1) I, THE UNDERSIGNED AM THE DULY AUTHORIZED AGENT OF THE OWNER - DEVELOPER.

2) THE STRATA PLAN IS ENTIRELY FOR RESIDENTIAL USE.

I, MAKE THIS SOLEMN DECLARATION CONSCIENTIOUSLY BELIEVING IT TO BE TRUE AND KNOWING THAT IT IS OF THE SAME FORCE AND EFFECT AS IF MADE UNDER OATH

DECLARED BEFORE ME AT Vancouver B.C.
THIS 22 DAY OF Dec, 1987.

RODERICK J. BALLANTYNE
BARRISTER & SOLICITOR
1650 - 650 W. Georgia St
Vancouver B.C.

A COMMISSIONER FOR TAKING AFFIDAVITS IN THE PROVINCE OF BRITISH COLUMBIA.

OWNER DEVELOPER
TAINA DEVELOPMENTS TURNBERRY LTD.

AUTHORIZED SIGNATORY

AUTHORIZED SIGNATORY

SECURITY PACIFIC BANK CANADA

AUTHORIZED SIGNATORY

AUTHORIZED SIGNATORY

ACCEPTED AS TO FORMS 1 AND 2
THIS 20 DAY OF JANUARY, 1988

SUPERINTENDENT OF REAL ESTATE

I, J.G. CAMERON, A BRITISH COLUMBIA LAND SURVEYOR, HEREBY CERTIFY THAT THE BUILDINGS SHOWN IN THE STRATA PLAN HAVE NOT, AS OF THE 8 DAY OF December, 1987, BEEN PREVIOUSLY OCCUPIED.
DATED AT SURREY, B.C.
THIS 8 DAY OF December, 1987

B.C.L.S.

FILE: 87-A-2463

CONDOMINIUM ACT

FLOOR PLAN & SECTION

STRATA PLAN N.W. 2715

SCALE: 1 : 250

3 2 1 0 5 10 m

BUILDING 1

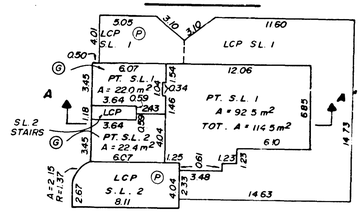

FIRST FLOOR

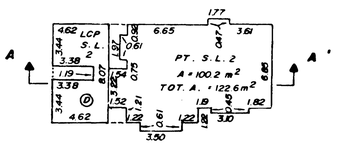

SECOND FLOOR

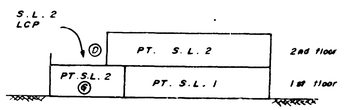

SECTION A - A'

DATED THIS 8 DAY OF December, 1987.

B.C.L.S.

FILE: 87-A-2463

CONDOMINIUM ACT

FLOOR PLAN & SECTION

STRATA PLAN N.W. 2715

SCALE : 1 : 250

3 2 1 0 5 10 m

BUILDING 2

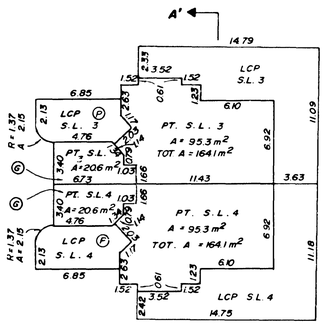

FIRST FLOOR

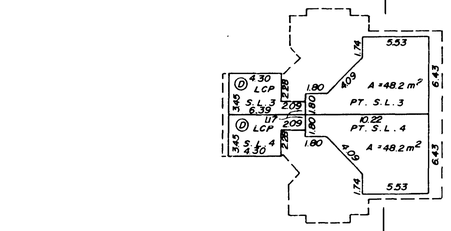

SECOND FLOOR

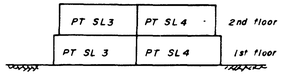

SECTION A - A'

DATED THIS 8 DAY OF December, 1987.

B.C.L.S.

FILE : 87 - A - 2463

CONDOMINIUM ACT

FLOOR PLAN & SECTION

STRATA PLAN N.W. 2715

SCALE : 1 : 250

3 2 1 0 5 10 m

BUILDING 3

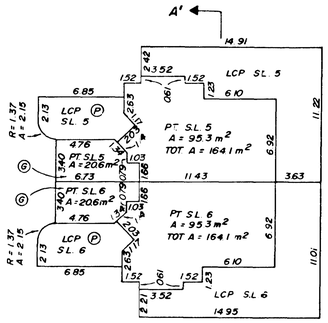

FIRST FLOOR

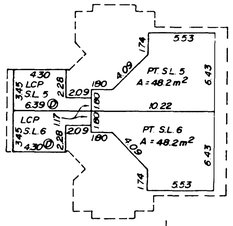

SECOND FLOOR

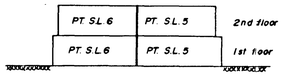

SECTION A - A'

DATED THIS 8 DAY OF December, 1987.

B.C.L.S.

FILE : 87 - A - 2463

CONDOMINIUM ACT

FLOOR PLAN & SECTION

STRATA PLAN N.W. 2715

SCALE : 1 : 250

3 2 1 0 5 10m

BUILDING 4

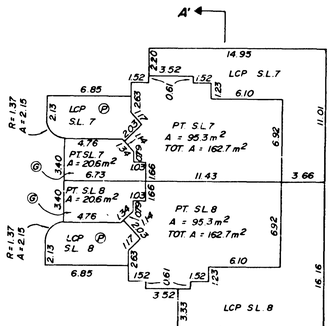

FIRST FLOOR

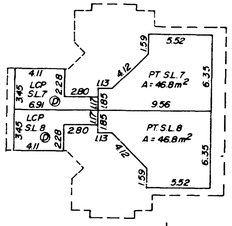

SECOND FLOOR

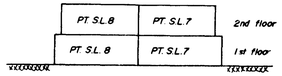

SECTION A - A'

DATED THIS 8 DAY OF December, 1987.

B.C.L.S.

FILE : 87 - A - 2463

2

CONDOMINIUM ACT

STRATA PLAN N.W. 2715

FLOOR PLAN & SECTION

SCALE : 1 : 250

3 2 1 0 5 10 m

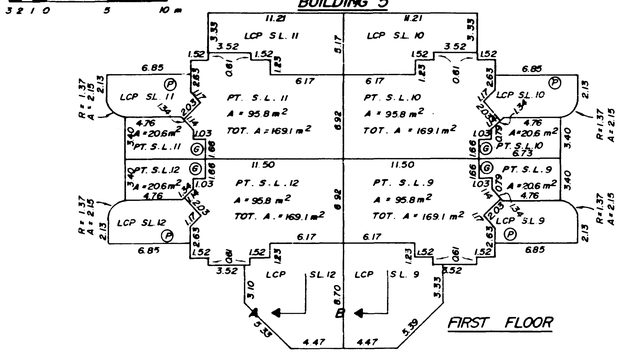

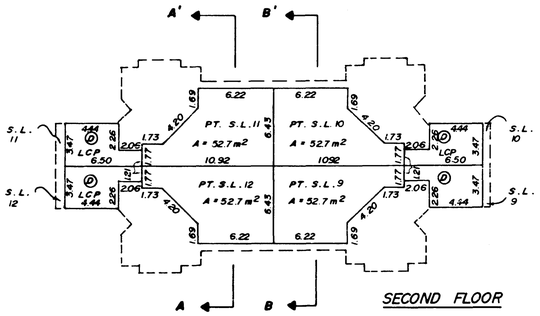

PT. S.L. 9, 12	PT. S.L. 10, 11
PT. S.L. 9, 12	PT. S.L. 10, 11

2nd floor

1st floor

SECTION A-A', B-B'

DATED THIS 8 DAY OF December, 1987.

B.C.L.S.

FILE : 87 - A - 2463

CONDOMINIUM ACT

STRATA PLAN N.W. 2715

FLOOR PLAN & SECTION

SCALE : 1 : 250

3 2 1 0 5 10m

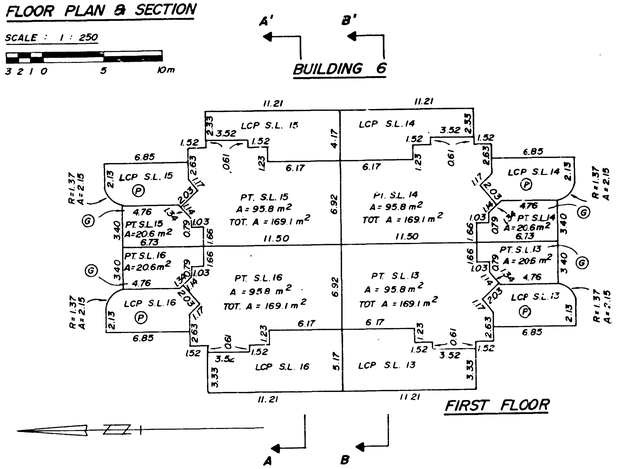

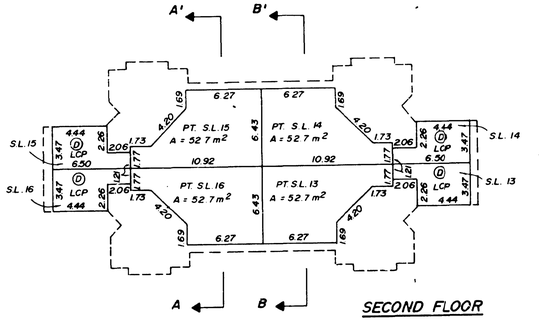

PT. S.L. 13, 16	PT. S.L. 14, 15
PT. S.L. 13, 16	PT. S.L. 14, 15

2nd floor

1st floor

SECTION A-A', B-B'

DATED THIS 8 DAY OF December, 1987.

B.C.L.S.

FILE : 87 - A - 2463

CONDOMINIUM ACT

STRATA PLAN N.W. 2715

FLOOR PLAN & SECTION

SCALE : 1 : 250

3 2 1 0 5 10m

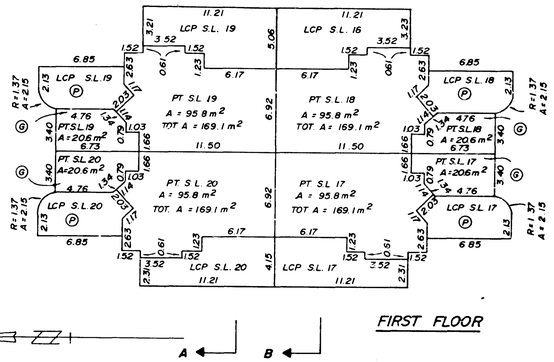

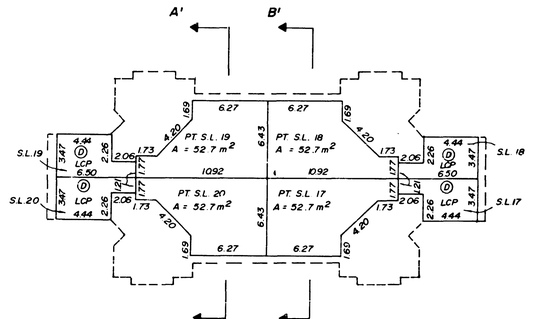

PT. S.L. 17, 20	PT. S.L. 18, 19
PT. S.L. 17, 20	PT. S.L. 18, 19

2nd floor

1st floor

SECTION A-A', B-B'

DATED THIS 8 DAY OF December, 1987

B.C.L.S.

FILE: 87 - A - 2463

CONDOMINIUM ACT

FLOOR PLAN & SECTION

STRATA PLAN N.W. 2715

SCALE : 1 : 250

3 2 1 0 5 10 m

BUILDING 8

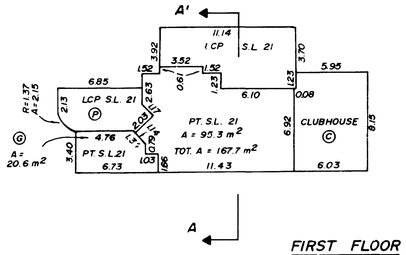

FIRST FLOOR

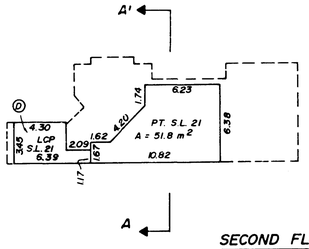

SECOND FLOOR

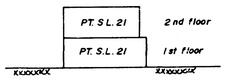

SECTION A-A'

DATED THIS 5 DAY OF December ,1987.

B.C.L.S.

FILE : 87 - A - 2463

CONDOMINIUM ACT

FLOOR PLAN & SECTION

STRATA PLAN N.W. 2715

SCALE : 1 : 250

3 2 1 0 5 10 m

BUILDING 9

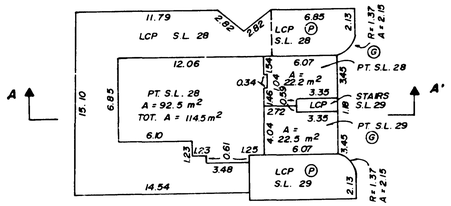

FIRST FLOOR

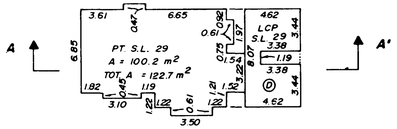

SECOND FLOOR

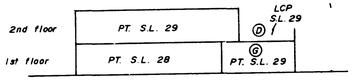

SECTION A - A'

DATED THIS 8 DAY OF December ,1987.

B.C.L.S.

FILE : 87 - A - 2463

CONDOMINIUM ACT

FLOOR PLAN & SECTION

STRATA PLAN N.W. 2715

SCALE : 1 : 250

3 2 1 0 5 10 m

BUILDING 10

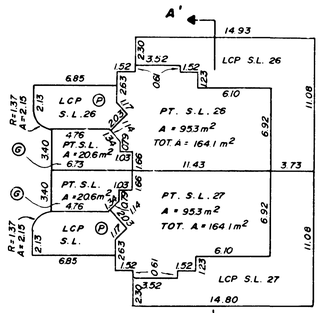

FIRST FLOOR

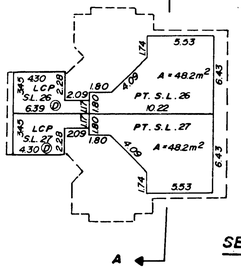

SECOND FLOOR

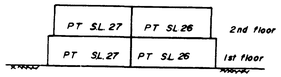

SECTION A - A'

DATED THIS 8 DAY OF December ,1987.

B.C.L.S.

FILE : 87 - A - 2463

4

CONDOMINIUM ACT

STRATA PLAN N.W. 2715

FLOOR PLAN & SECTION

SCALE : 1:250

3 2 1 0 5 10m

BUILDING 11

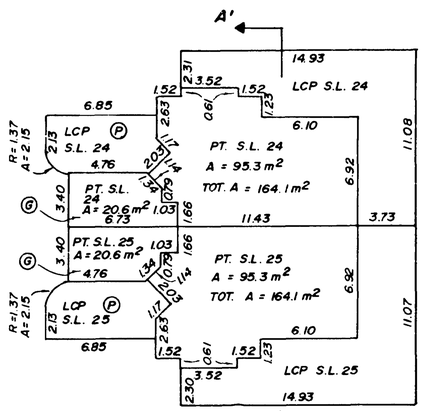

FIRST FLOOR

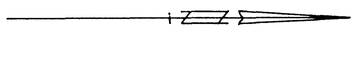

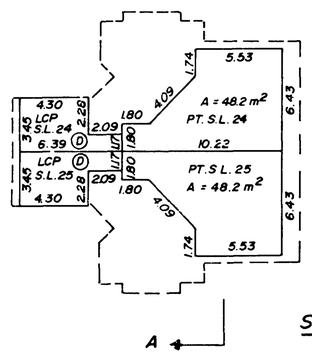

SECOND FLOOR

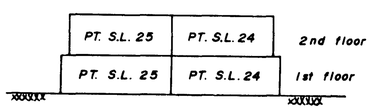

SECTION A - A'

DATED THIS 8 DAY OF December, 1987.

B.C.L.S.

FILE : 87 - A - 2463

CONDOMINIUM ACT

STRATA PLAN N.W. 2715

FLOOR PLAN & SECTION

SCALE : 1:250

3 2 1 0 5 10m

BUILDING 12

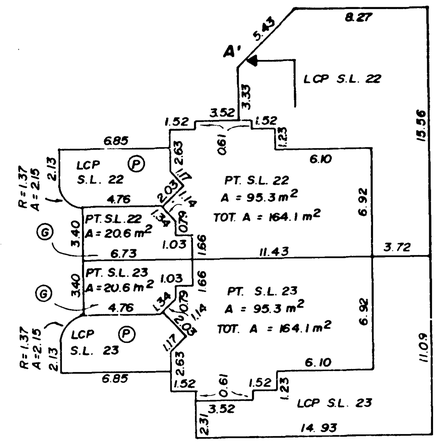

FIRST FLOOR

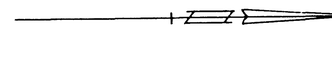

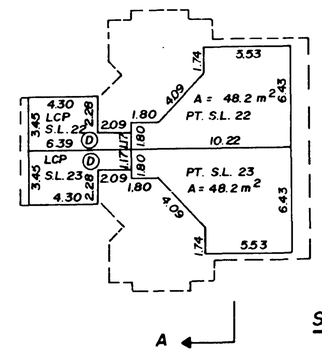

SECOND FLOOR

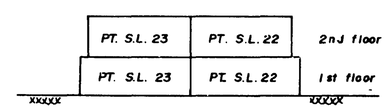

SECTION A - A'

DATED THIS 8 DAY OF December, 1987.

B.C.L.S.

FILE : 87 - A - 2463

5

STRATA PLAN N.W. 2715

RECORD OF BY-LAWS AND ORDERS, ETC.

FILING		DOCUMENT	
NUMBER	DATE	DATE	NATURE OF PARTICULARS

DATED THIS 8 DAY OF December, 1987.

B.C.L.S.

NW - 7438

FILE : 87-A-2463

STRATA PLAN N.W. 2715

DEALINGS AFFECTING THE COMMON PROPERTY

REGISTRATION		DOCUMENT	
NUMBER	DATE	DATE	NATURE OF PARTICULARS
AA110469	15.6.87	@ 13:40	MORTGAGE SECURITY PACIFIC BANK CANADA INTER ALIA
AA110470	15.6.87	@ 13:40	MORTGAGE SECURITY PACIFIC BANK CANADA INTER ALIA
AA142484	28.7.87	@ 13:22	STATUTORY RIGHT OF WAY DISTRICT OF SURREY PLAN 75034 WITH PRIORITY OVER AA110469 AND AA110470 INTER ALIA
AA147899	4.8.87	@ 10:56	COVENANT DISTRICT OF SURREY INCLUDES INDEMNITY UNDER SECTION 215(2)(A) LAND TITLE ACT INTER ALIA
AA147900	4.8.87	@ 10:57	PRIORITY AGREEMENT GRANTING AA147899 PRIORITY OVER AA110469 AND AA110470 INTER ALIA

DATED THIS 8 DAY OF December, 1987.

B.C.L.S.

NW 7438

FILE : 87-A-2463

6